Product information
650 FIRE Universal-Sets

fix-programmed digital CDI ignition with recharge for battery

item number.	name	remark
set DMon 00131697	**650 set for two-stroke, Ø 90mm**	
650812/00131692	stator complete 650, Ø90	base-plate with Ø 90 mm
650948/00131696	rotor universal	
650330/00131694	e-box two-stroke	two-stroke advance curve, 1 cylinder
650100/00129600	ignition coil, red,	with spark-plug connector 5k-ohm
set DMon 00131698	**650 set for four-stroke, Ø 90mm**	
650812/00131692	stator complete 650, Ø90	base-plate with Ø 90 mm
650948/00131696	rotor universal	
650331/00131695	e-box four-stroke	four-stroke advance curve, 1 cylinder
650100/00129600	ignition coil, red,	with spark-plug connector 5k-ohm
set DMon 00131699	**650 set for two-stroke, Ø 94mm**	
650819/00131693	stator complete 650, Ø94	base-plate with Ø 94 mm
650948/00131696	rotor universal	
650330/00131694	e-box two-stroke	two-stroke advance curve, 1 cylinder
650100/00129600	ignition coil, red	with spark-plug connector 5k-ohm
set DMon 00131700	**650 set for four-stroke, Ø 94mm**	
650819/00131693	stator complete 650, Ø94	base-plate with Ø 94 mm
650948/00131696	rotor universal	
650331/00131695	E-Box 4-Takt	four-stroke advance curve, 1 cylinder
650100/00129600	ignition coil, red,	with spark-plug connector 5k-ohm

www.dmon-parts.com

1. Edges of rotor determine the ignition timing!

The rotor has a trigger-window with two edges. At each direction of rotation, the trailing edge produces the hardware-ignition (engine's start only) immediately.
The leading edge starts the trigger for the software. This software-trigger determines the ignition timing (normal run after engine's start) with appropriate delay (programmed in advance curve).

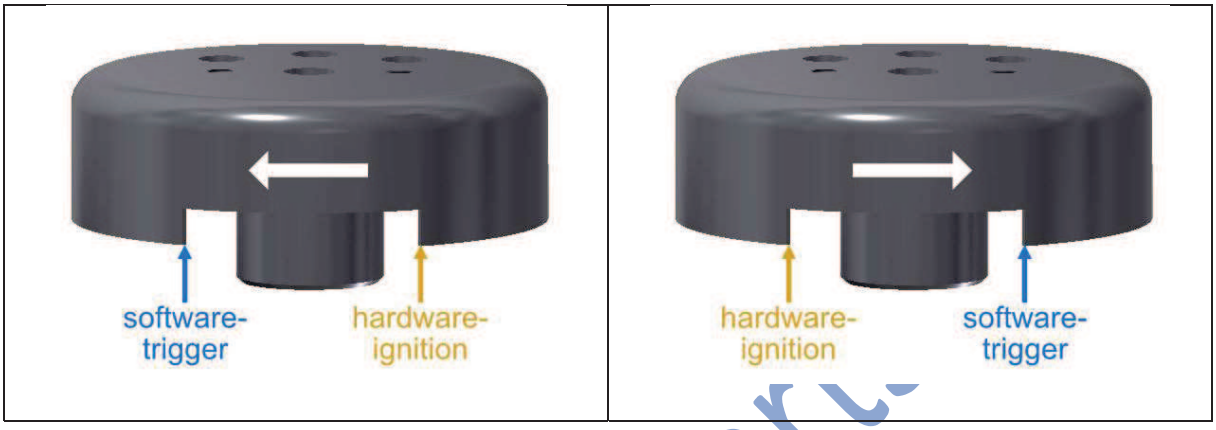

If the particular edge of trigger-window passes the center of magnet in the stator, the appropriate action occurs. Here is an example for clockwise rotation.

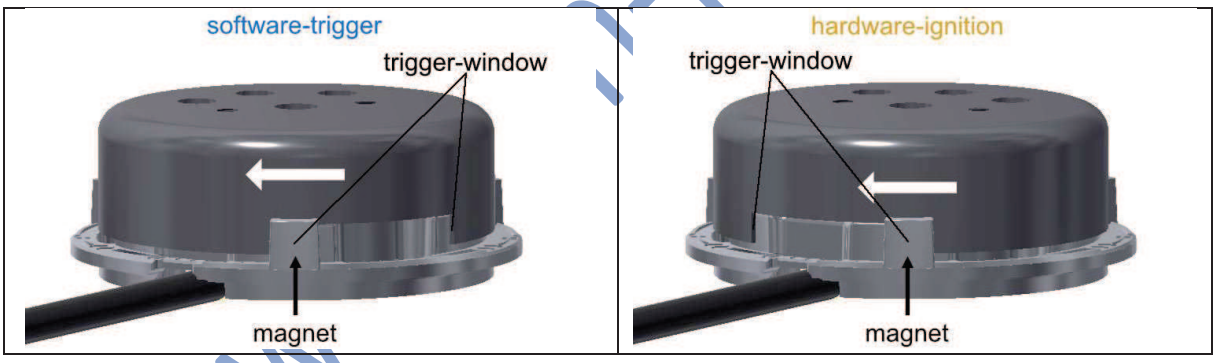

For a reliable detection of edges in the trigger-window the rotor has to be mounted with exact distance to the stator.

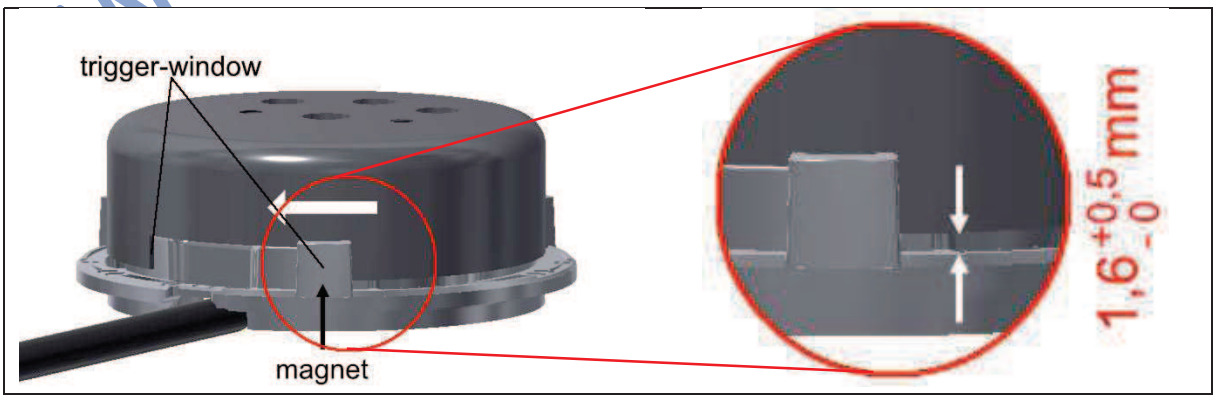

2. The programmed advance curve

The advance curve is shown here with relative values,
thus without direct reference to an individual engine.

The relative value describes how far is the software-ignition before the hardware-ignition. Later the position of rotor in relation to piston's position and long holes in stator determine the absolute (actual) ignition timing for hardware and software, measured at the engine in degree before top dead center (BTDC).

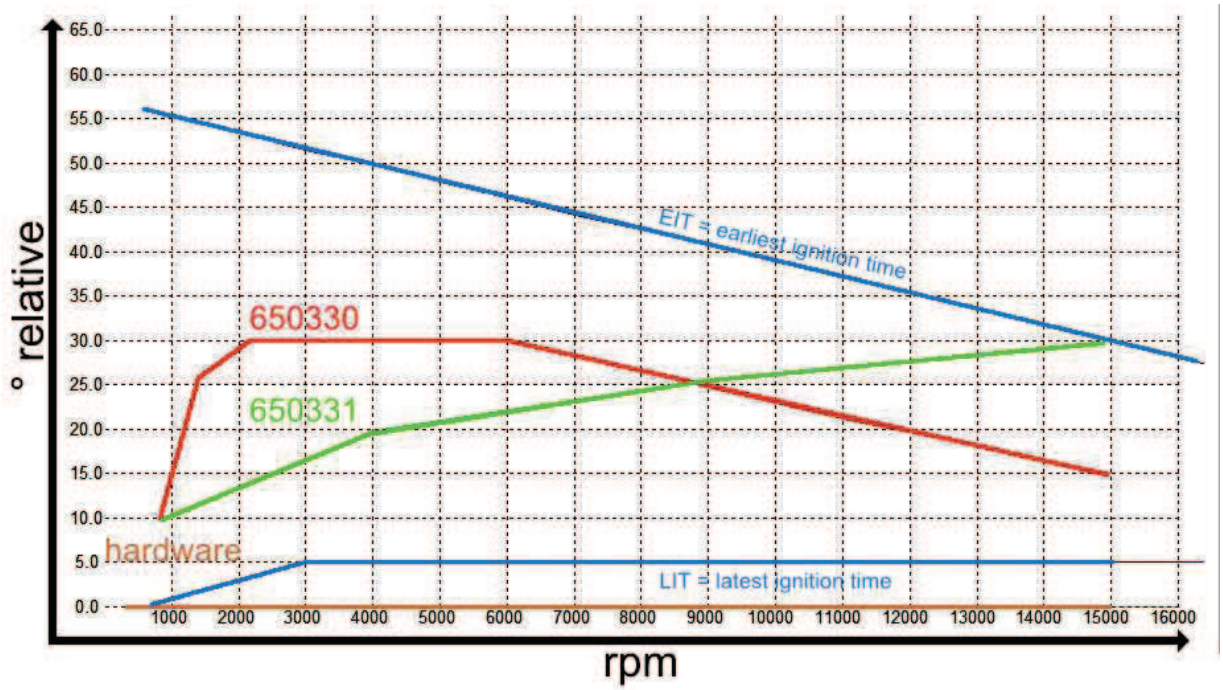

3. Assembly examples and actual ignition timing

E-box 650330

- Assuming the engine should start at 5° BTDC, the piston must be in the position 5° BTDC before assembling of rotor. The rotor will be mounted in this piston position so, that its hardware-edge is centered to the magnet in the stator.
- The relative value at 4000 rpm is 30° before hardware-ignition. Therefore, in this adjustment example the software-ignition is at 35° BTDC (5° BTDC + 30° relative = 35° BTDC).

E-box 650331

- Assuming the engine should start at 5° BTDC, the piston must be in the position 5° BTDC before assembling of rotor. The rotor will be mounted in this piston position so, that its hardware-edge is centered to the magnet in the stator.
- The relative value at 4000 rpm is 20° before hardware-ignition. Therefore, in this adjustment example the software-ignition is at 25° BTDC (5° BTDC + 30° relative = 25° BTDC).

A skewing of stator in its long holes results in a shift for hardware-ignition and software-ignition, because the magnet will be skewed with the stator. Consequently, now the piston is in another position if rotor's edges are centered to the magnet.

www.dn

4. Technical data

For functional assurance a suppressor against spark interferences is necessary!
Therefore a 5kΩ resistor is integrated in the spark plug connector.

Ø flywheel	90,4 mm	
Ø base-plate 650812	90 mm	
Ø base-plate 650819	94 mm	
rotating direction	clockwise and counter-clockwise	
ignitions pro rotation°	1	
start speed	500 rpm	
speed limit	15.000 rpm	
spark polarity	negative	
spark energy	ca. 7 mJ	
spark duration	200 µs	
rise of high voltage	2,5 µs	1kV to 8kV, 50pF load
voltage at kill-switch	+5 V	electronic shut-off
power of 12V-generator	ca. 65 W	by 9500 rpm
operation temperature e-box, ignition coil	-20 … +80 °C	
operation temperature stator, rotor	-20 … +120 °C	

5. Wiring diagram and part drawings

(see following pages)

www.dmon-parts.com

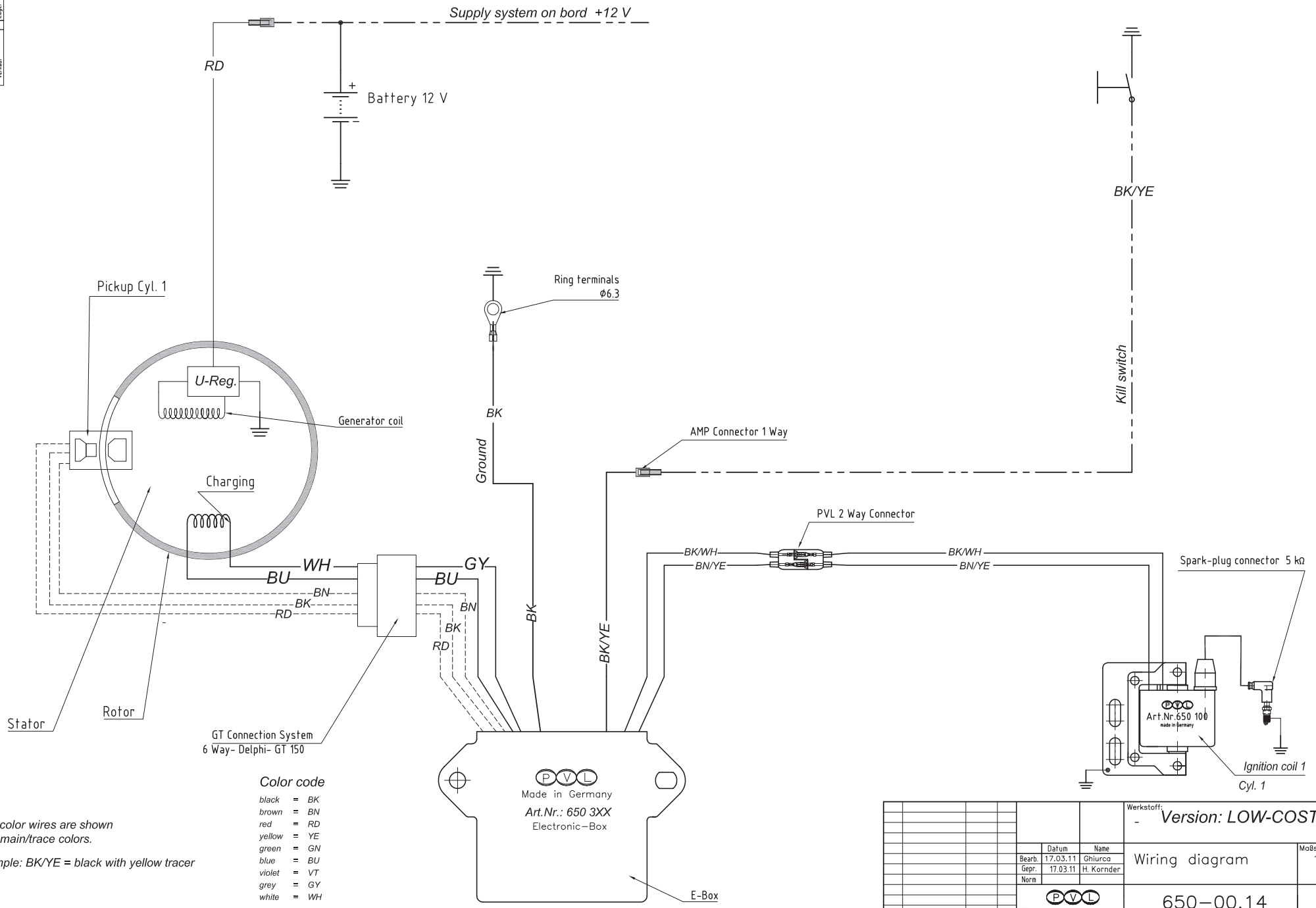
Supply system on bord +12 V
RD
Battery 12 V
BK/YE
Kill switch
Pickup Cyl. 1
Ring terminals
ϕ6.3
U-Reg.
Generator coil
BK
Ground
AMP Connector 1 Way
Charging
PVL 2 Way Connector
BK/WH
BN/YE
BK/WH
BN/YE
Spark-plug connector 5 kΩ
WH
BU
GY
BU
BN
BK
RD
BN
BK
RD
BK
BK/YE
Art.Nr.650 100
made in Germany
Ignition coil 1
Cyl. 1
Stator
Rotor
GT Connection System
6 Way- Delphi- GT 150
Made in Germany
Art.Nr.: 650 3XX
Electronic–Box
E-Box
Color code
black = BK
brown = BN
red = RD
yellow = YE
green = GN
blue = BU
violet = VT
grey = GY
white = WH
Two color wires are shown
with main/trace colors.
example: BK/YE = black with yellow tracer
Version: LOW-COST
Wiring diagram
650–00.14
Maßstab: 1:1
Bearb. 17.03.11 Ghiurca
Gepr. 17.03.11 H. Kornder
Norm
PVL Electronic
90556 Cadolzburg
Art.Nr.:
Zust. Änderung Datum Name
Copyright © PVL Cadolzburg All Rights Reserved
DRAWING MADE IN EUROPEAN PROJECTION

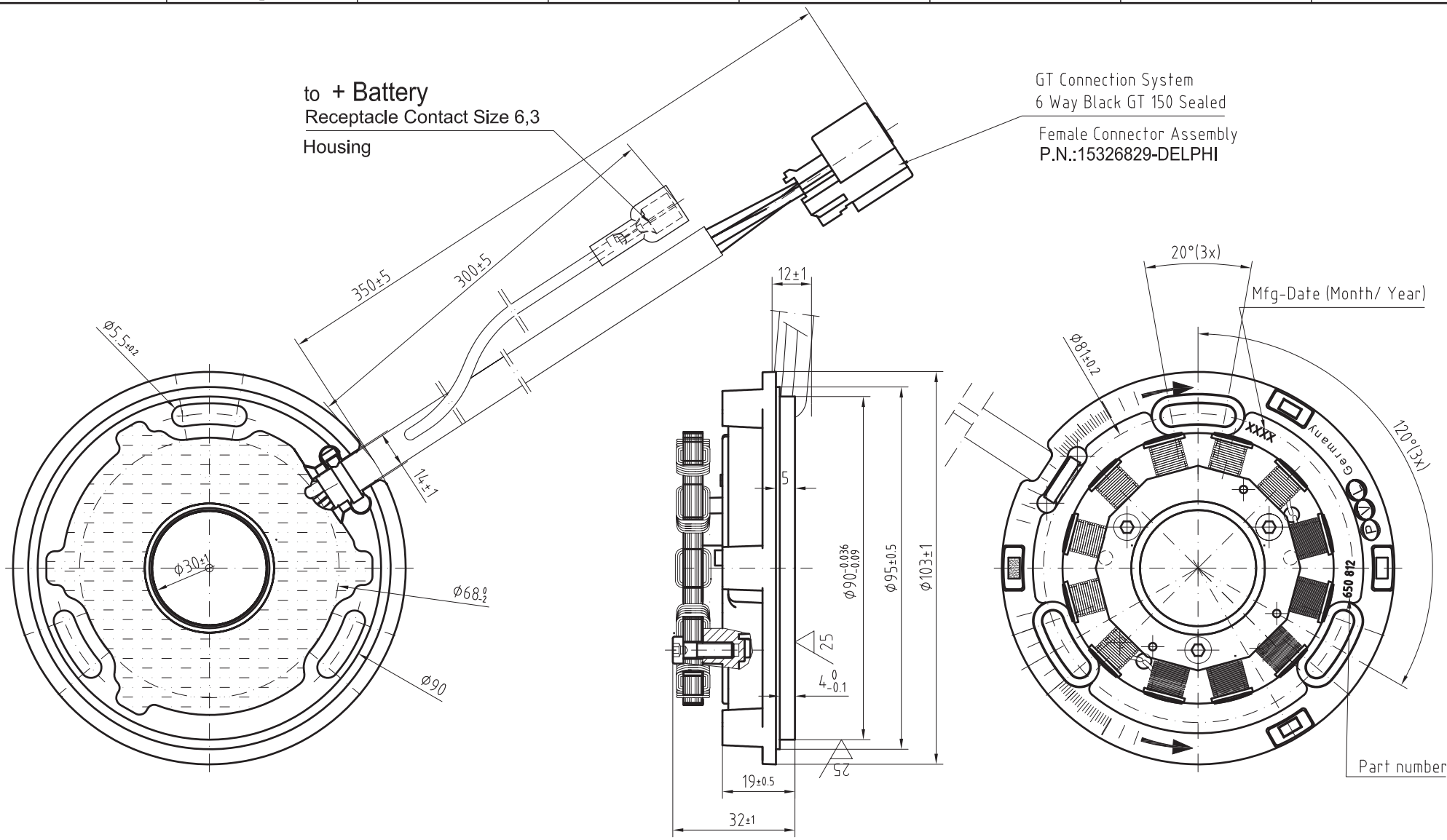

Copyright (C) PVL Electronic All Rights Reserved DRAWING MADE IN EUROPEAN PROJECTION

Freimaßtoleranz: Dimensions without tolerance indication ±1mm angles ±1.5°	Werkstoff:
Bearb. 09.06.06 KI	Stator 1 Cyl. ø90 — Maßstab: 1:1
Gepr. / Norm	650-08.12 — Maßstab: A3
PVL Electronic 90556 Cadolzburg	Art.Nr.: 650812

Zust. | Änderung | Datum | Name

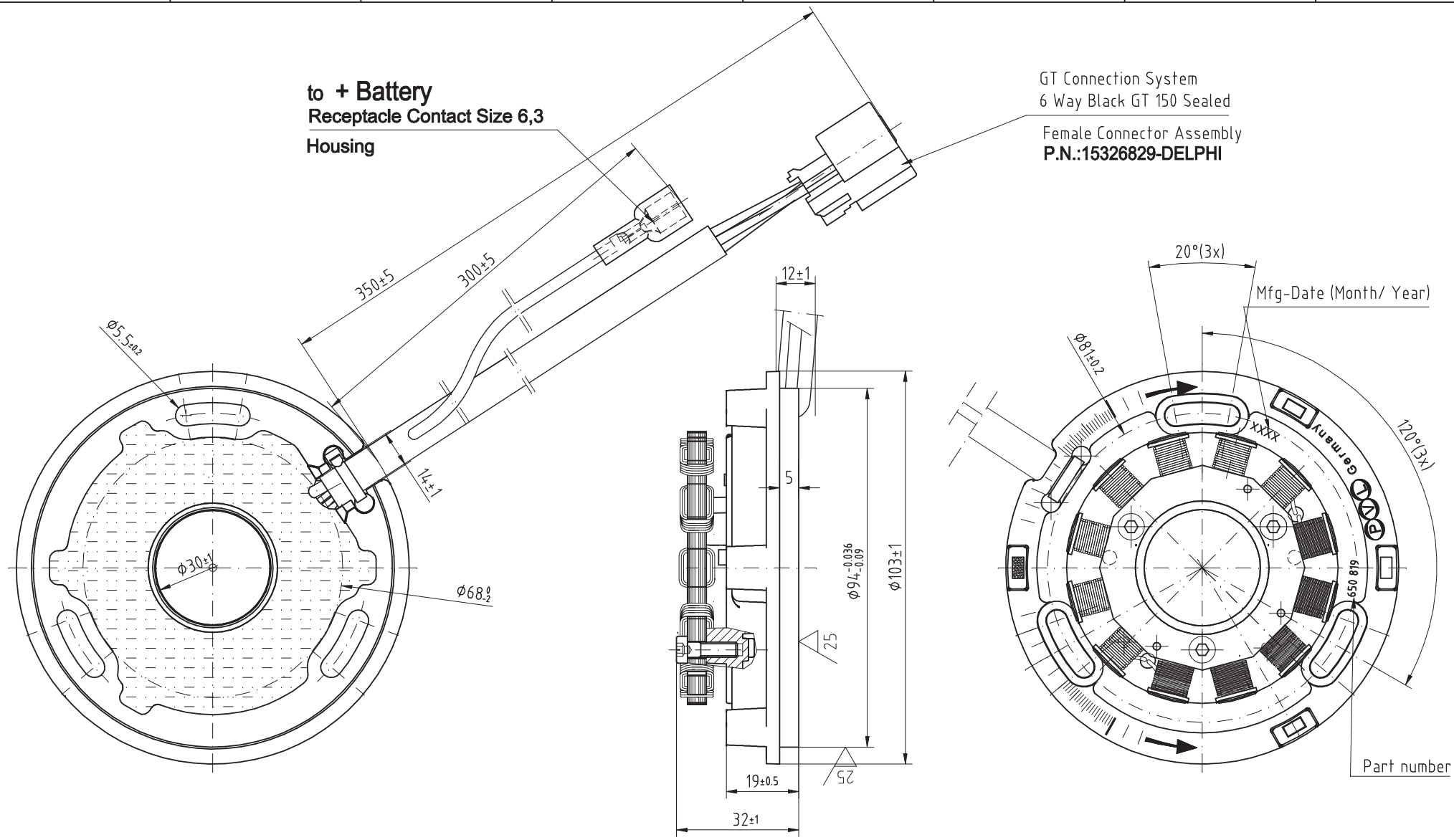

				Freimaßtoleranz: Dimensions without tolerance indication ±1mm angles ±1.5°		Werkstoff:	
					Datum	Name	Stator 1 Cyl. ø94
				Bearb.	20.05.09	Kl	Maßstab: 1:1
				Gepr.	26.05.09	Be	
				Norm			
Zust.	Änderung	Datum	Name	PVL Electronic 90556 Cadolzburg		650–08.19	Maßstab: A3
						Art.Nr.: 650819	

Copyright (C) PVL Electronic All Rights Reserved DRAWING MADE IN EUROPEAN PROJECTION

×	EK
	EL
×	FE
	GL
×	LAB
××	QS
×	VK
	AK
	EK

Copyright (C) PVL Electronic All Rights Reserved DRAWING MADE IN EUROPEAN PROJECTION

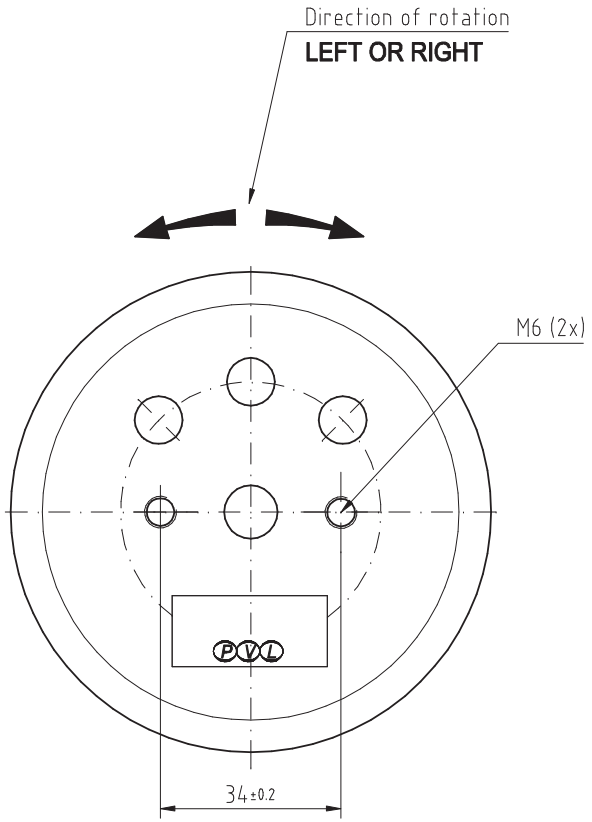

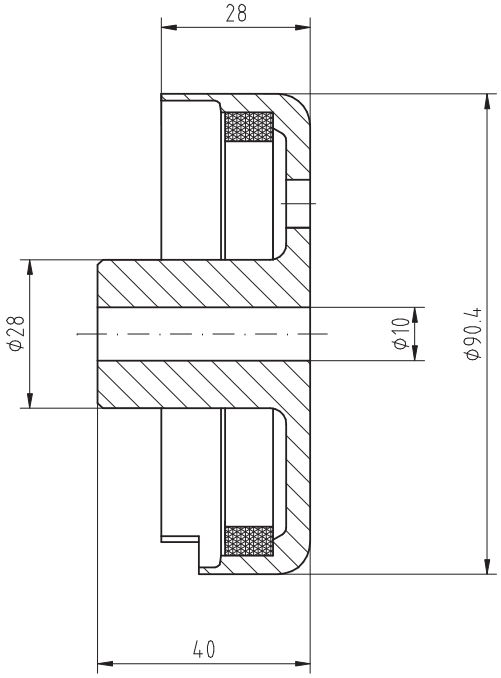

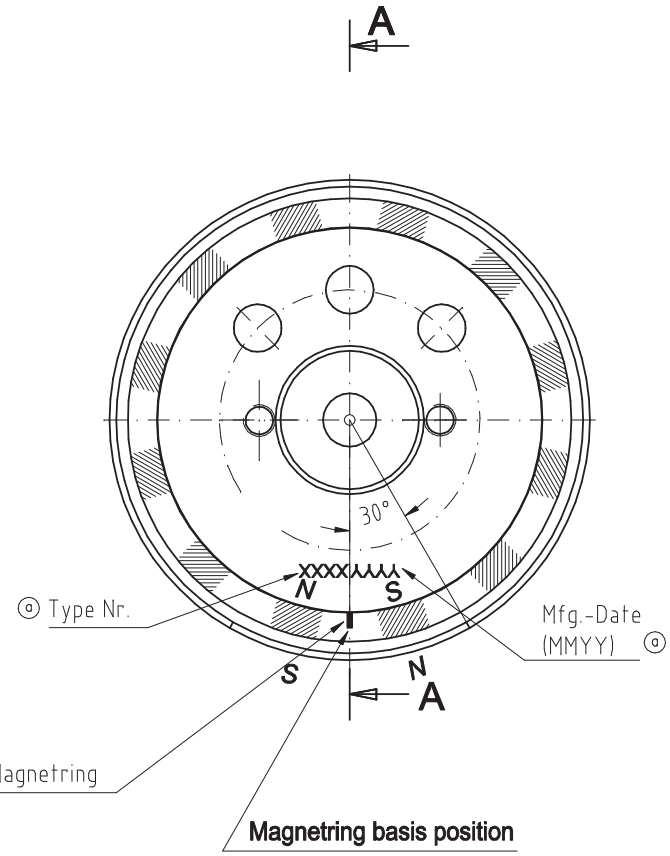

absentee mass and indication see drawing 650-52.21; 650-96.48 and 650-54.48

surface: zinc-plated; chromated
sharp edges removed 0.3x45°

unbalance < 60 gmm

Zust.	Änderung	Datum	Name
a	Fert.-Dat. hinzu, Tpen-Bez. versetzt	03.02.10	Kl

Freimaßtoleranz:
Dimensions without tolerance indication ±1mm angles ±1.5°

	Datum	Name
Bearb.	17.08.05	Kl
Gepr.	03.02.10	Be
Norm		

Werkstoff:

Rotor

Maßstab: 1:1

PVL Electronic
90556 Cadolzburg

650-09.48

Art.Nr.: 650948

Maßstab: A3

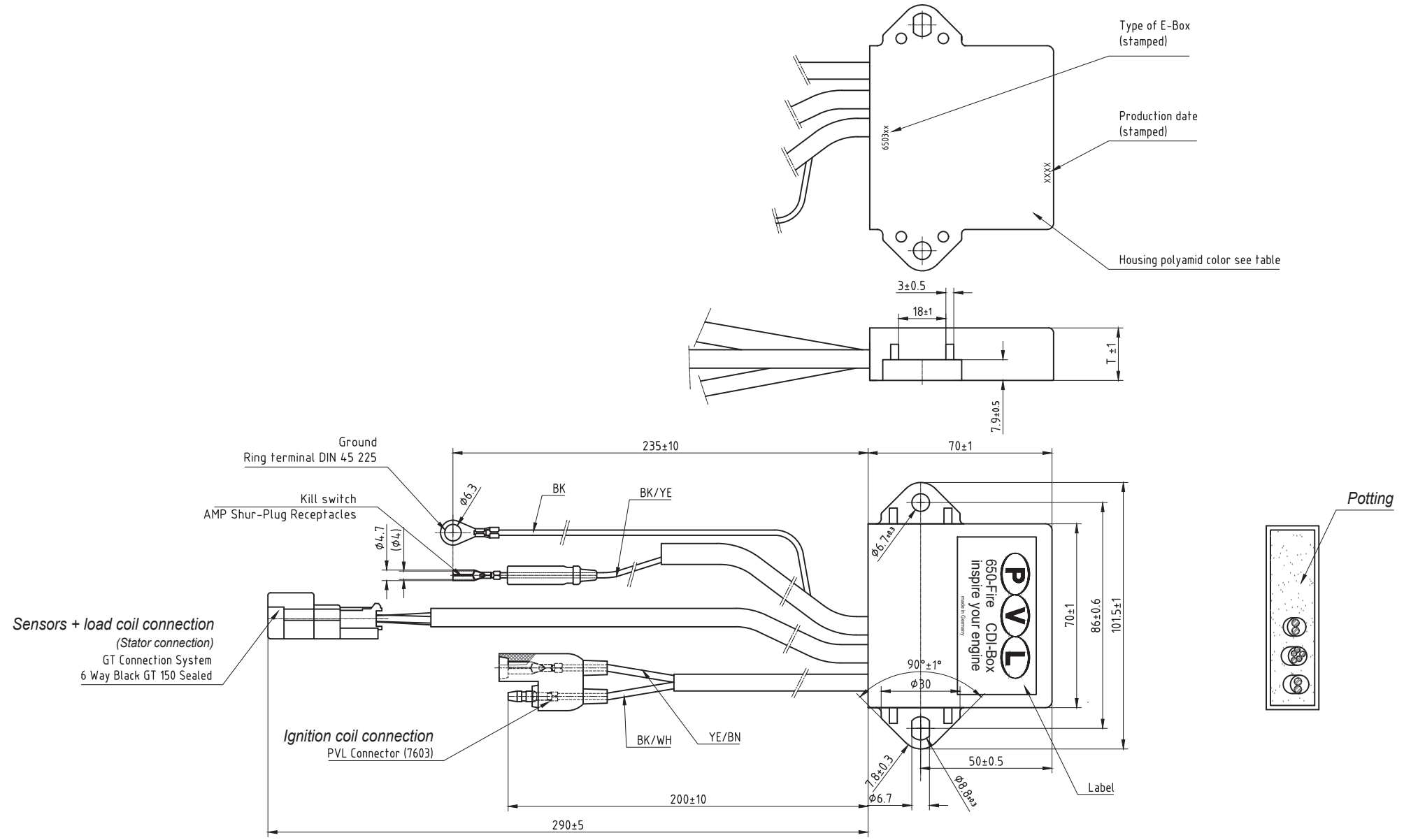

EK
EL
FE
GL
LAB
QS
VK
AK
EK

DRAWING MADE IN EUROPEAN PROJECTION

Copyright by PVL Electronic
All rights reserved.
Refered to protection notice ISO 16016

Kunde	E-Box PVL.-Nr.	Kurve/ curve PVL.-Nr.	Gehäusefarbe/ housing coulor
Universal 2-Takt	650 330	000 9118	rot
Universal 4-Takt	650 331	000 9119	rot

Two color wires are shown with main/trace colors.
example: BK/YE = black with yellow tracer

Color code

black	=	BK
brown	=	BN
red	=	RD
yellow	=	YE
green	=	GN
blue	=	BU
violet	=	VT
grey	=	GY
white	=	WH

Zulässige Maße ohne Toleranzangabe / Unless otherwise specified:
±1mm; Winkel ±1,5°; Radien R1,5mm
±1mm; angles ±1,5°; rad R1.5 mm

Idx.	Änderung/ Change	Datum/Date	Name

Freimaßtoleranz/ Unless otherwise specified: ISO 2768-m

	Datum/ Date	Name/ Name
Bearb./Draw.	11.06.19	Nguepehou
Gepr./Check	12.06.19	RF

Abmessungen in mm/ All dimensions in mm

EE

Material/ Material: -

Benennung/ Description: E-Box universal 2-Takt/ 4-Takt

Maßstab/ Scale: 1:1

Zeichnungsnummer/ Drawing-No.: 650-03.30

Format/ Format: A2

Artikelnummer/ Part-No.: s. Tabelle

Seite/ Page: 1/1