×	EK
	EL
×	FE
	GL
×	LAB
××	QS
×	VK
	AK
	EK

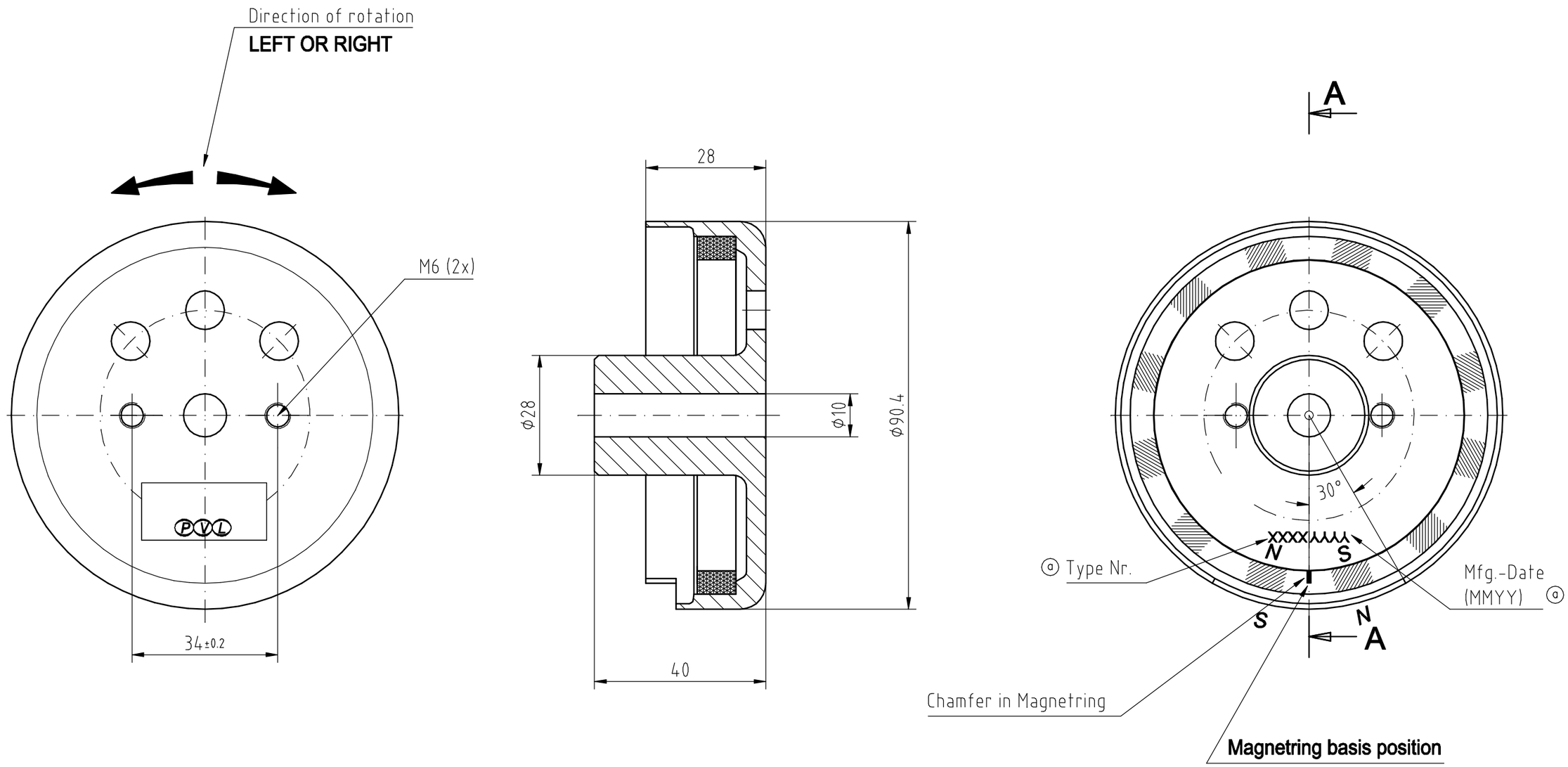

absentee mass and indication see drawing 650-52.21; 650-96.48 and 650-54.48

surface: zinc-plated; chromated
sharp edges removed 0.3x45°

unbalance < 60 gmm

Zust.	Änderung	Datum	Name
a	Fert.-Dat.hinzu;Tpen-Bez. versetzt	03.02.10	Kl

Freimaßtoleranz:
Dimensions without tolerance indication ±1mm angles ±1.5°

	Datum	Name
Bearb.	17.08.05	Kl
Gepr.	03.02.10	Be
Norm		

PVL Electronic
90556 Cadolzburg

Werkstoff:

Rotor

Maßstab: 1:1

650–09.48

Art.Nr.: 650948

Maßstab: A3

Copyright (C) PVL Electronic All Rights Reserved DRAWING MADE IN EUROPEAN PROJECTION